G.I. INDUSTRIAL HOLDING SPA

Installation, use and maintenance manual

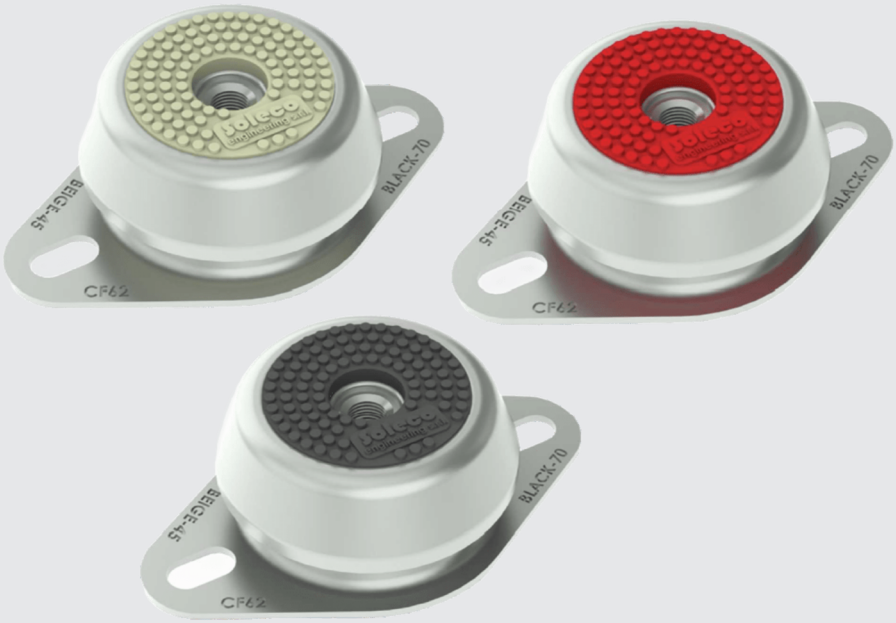

Rubber shock absorbers

AG

KTK KLIMATECHNIK

SOMMARIO

1 Supply..... 5
2 Installation under the unit..... 6
3 Dimensional..... 7
4 Data Sheets.....10

1 SUPPLY

COMPONENTS PROVIDED

The kit includes the following components:

- fastening screws
- washers
- Rubber shock absorbers
- instruction sheet

The enclosed table shows, for each AG accessory code: the model, quantity and type of vibration damper supplied.

Accessory code	Model	Reference	Hardness (sh)	Fixing screw diameter (mm)	Quantity
QAG01010181	623110	B	60	M10	4
QAG01820302K	623110	B	60	M10	4
QAG02520342	623110	B	60	M10	4
QAG01820302	623110	B	60	M10	6
QAG01820302	623110	B	60	M10	6
QAG01820363R	623110	B	60	M10	8
QAG05040684	623110	B	60	M10	8
QAG03930453R	623110	B	60	M10	10
QAG03040504	623110	B	60	M10	10
QAG01820604W	924512	E	60	M12	4
QAG01440204	924512	E	60	M12	6
QAG03630453K	924512	E	60	M12	6
QAG03640604	924512	E	60	M12	8
QAG10481208	924512	E	60	M12	8
QAG13011801K	924512	E	60	M12	10
QAG13811801	924512	E	60	M12	10
QAG05240605	924512	E	60	M12	12
QAG08021602	924516	F	70	M16	4
QAG08021002	924516	F	70	M16	6
QAG11021602	924516	F	70	M16	8
QAG16812101K	924516	F	70	M16	8
QAG28024402	924512	F	70	M16	8
QAG16042204	924516	F	70	M16	10
QAG24043204	924512	F	70	M16	12
QAG32023202	924516	F	70	M16	14
QAG323023202	924516	F	70	M16	14
QAG33023402	924516	F	70	M16	16
QAG36024202	924516	F	70	M16	18
QAG48044804	924512	F	70	M16	20
QAG30013601	924512	F	70	M16	20
QAG46024602	924512	F	70	M16	22
QAG50025602	924512	F	70	M16	24
QAG16043204	1505016	H	60	M16	4
QAG32025802	1505016	H	60	M16	4
QAG40025602	1505016	H	60	M16	6
QAG44026002	1505016	H	60	M16	10
QAG66039003	1505016	H	60	M16	14
QAG63026302	1505016	H	60	M16	20

Please refer to the dedicated chapter in this manual for the specific dimensions and technical features of the shock absorbers.

2 INSTALLATION UNDER THE UNIT

1. Locate the fixing holes in the base of the unit. The position is marked with a designated sticker.

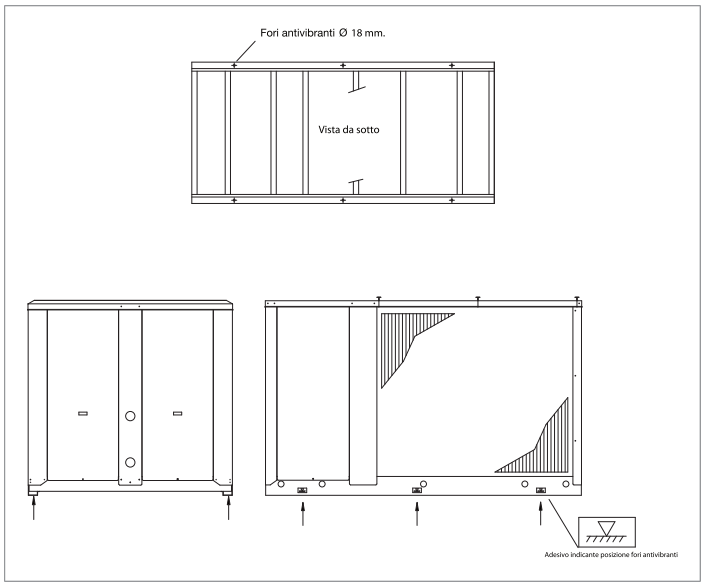

2. Place the shock absorbers under the fixing points (E1) provided on the base of the unit.

3. Insert the screw with washer (E2) into the fixing hole on the unit base (E1).

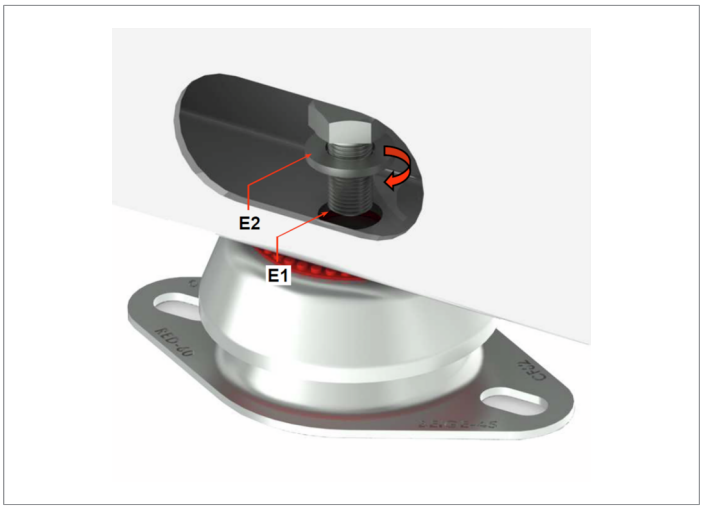

4. Lock the position of the shock absorbers by tightening the screw head (E2).

It reserves the right to make changes to the specifications contained in this booklet at any time without prior notice. This booklet may not be reproduced and/or communicated to third parties without prior permission.

3 DIMENSIONAL

mod. CFN6231

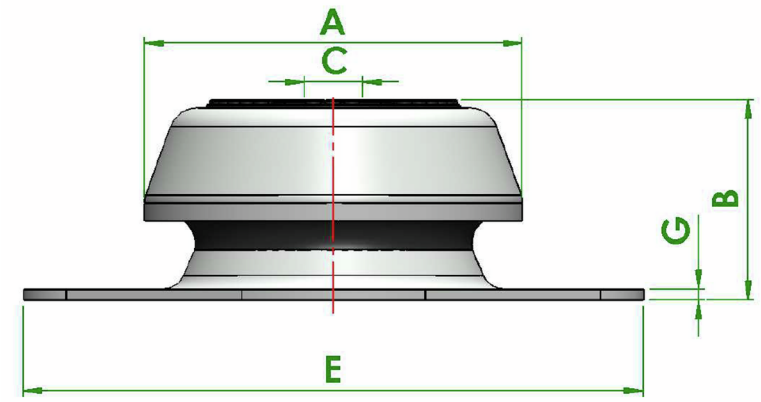

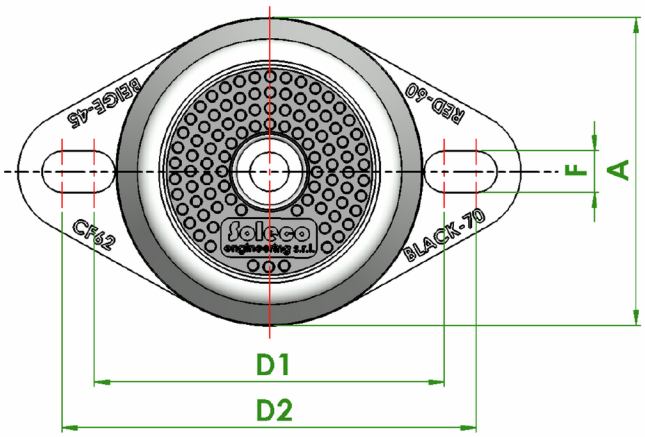

		A	B	C	d1	d2	E	F	G	Deflection	Hardness	Weight
Model	Reference	(mm)	(mm)	(mm)	(mm)	(mm)	(mm)	(mm)	(mm)	(mm)	(Sh)	(gr.)
CFN6231	A	67	34	M10	76.5	90.5	110	9	2	3	45	250
CFN6231	B	67	34	M10	76.5	90.5	110	9	2	3	60	250
CFN6231	C	67	34	M10	76.5	90.5	110	9	2	3	70	250

mod. CFN9245

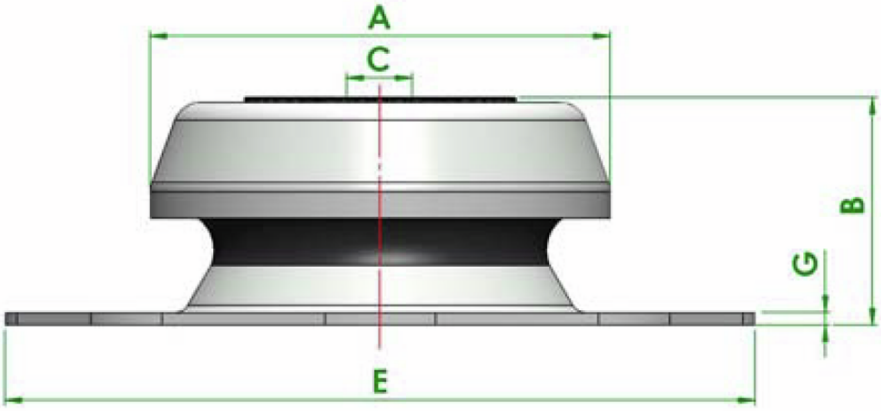

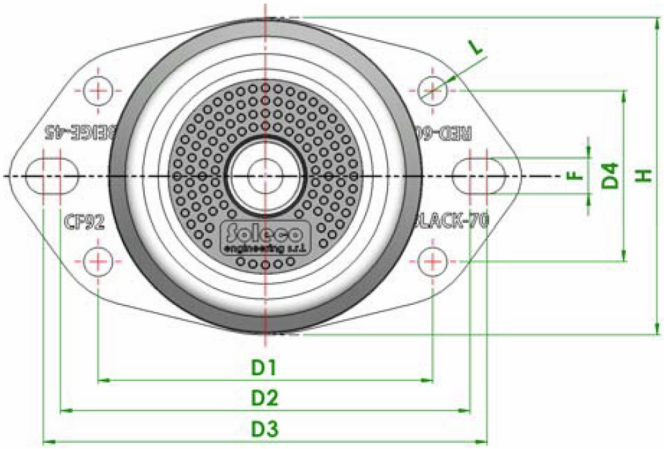

		A	B	C	d1	d2	d3	d4	E	F	G	H	L (Φ)	Deflection	Hardness	Weight
Model	Reference	(mm)	(mm)	(mm)	(mm)	(mm)	(mm)	(mm)	(mm)	(mm)	(mm)	(mm)	(mm)	(mm)	(Sh)	(gr.)
CFN9245	D	92	44	M12	98	120	130	50	150	10.5	2.5	93	8.5	4	45	600
CFN9245	E	92	44	M12	98	120	130	50	150	10.5	2.5	93	8.5	4	60	600
CFN9245	F	92	44	M16	98	120	130	50	150	10.5	2.5	93	8.5	4	70	600

mod. CFN15050

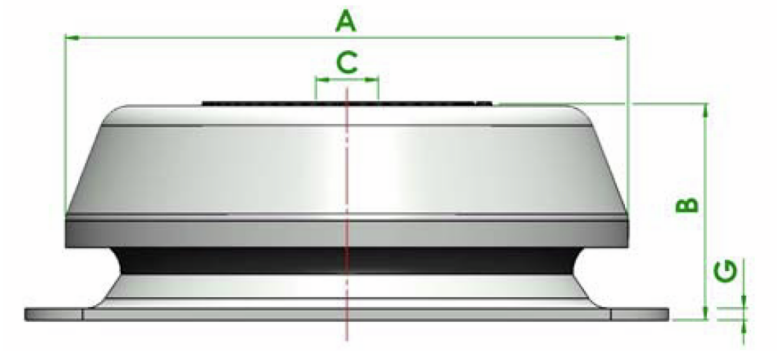

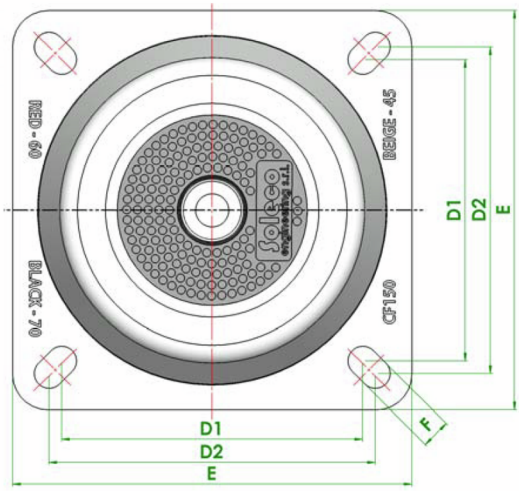

		A	B	C	d1	d2	E	F	G	Deflection	Hardness	Weight
Model	Reference	(mm)	(mm)	(mm)	(mm)	(mm)	(mm)	(mm)	(mm)	(mm)	(Sh)	(Kg.)
CFN15050	G	147	56	M16	126.5	137.5	168	12.5	3	5	45	1.84
CFN15050	H	147	56	M16	126.5	137.5	168	12.5	3	5	60	1.84
CFN15050	I	147	56	M16	126.5	137.5	168	12.5	3	5	70	1.84

4 DATA SHEETS

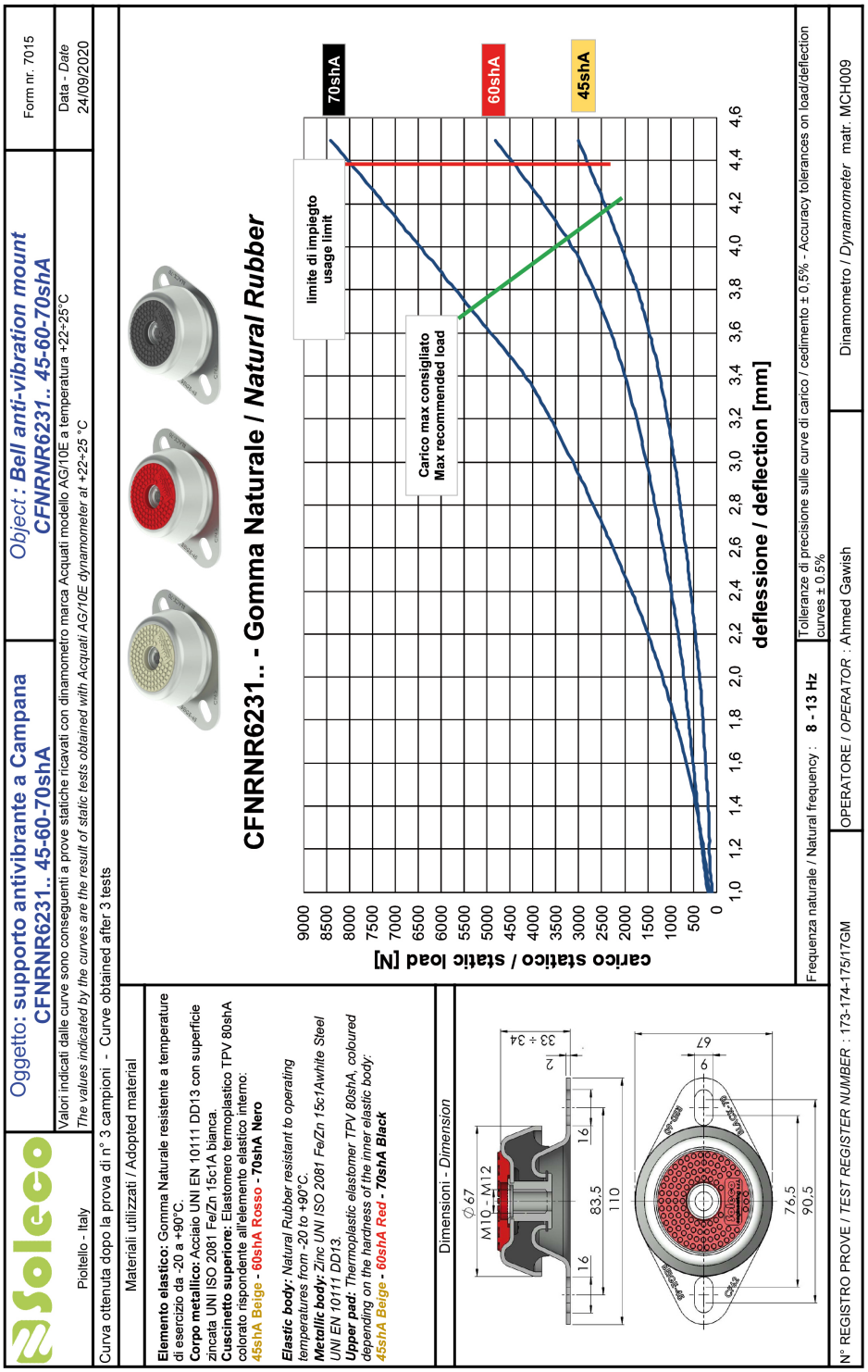

SCHEDA DI PROVA - TEST DATA SHEET

Soleco engineering s.r.l. Pioltello - Italy	Oggetto: **supporto antivibrante a CAMPANA CFNRNR9245.. 45-60-70shA**	*Object* : ***Bell anti-vibration mount CFNRNR9245.. 45-60-70shA***	Form nr. 7015
	Valori indicati dalle curve sono conseguenti a prove statiche ricavati con dinamometro marca Acquati modello AG/10E a temperatura +22÷25°C *The values indicated by the curves are the result of static tests obtained with Acquati AG/10E dynamometer at +22÷25 °C*		Data - *Date* 14/02/2018

Provenienza materiale : *Material origin:*	X	DA MAGAZZINO - *FROM WAREHOUSE*
		DA FORNITORE - *FROM SUPPLIER* ……

Curva ottenuta dopo la prova di n° 3 campioni - *Curve obtained after 3 tests*

Materiali utilizzati / *Adopted material*

Elemento elastico: Gomma Naturale resistente a temperature di esercizio da -20 a +90°C.
Corpo metallico: Acciaio UNI EN 10111 DD13 con superficie zincata UNI ISO 2081 Fe/Zn 15c1A bianca.
Cuscinetto superiore: Elastomero termoplastico TPV 80shA colorato rispondente all'elemento elastico interno.
45shA Beige - 60shA Rosso - 70shA Nero

Elastic body: *Natural Rubber resistant to operating temperatures from -20 to +90°C.*
Metallic body: *Zinc UNI ISO 2081 Fe/Zn 15c1Awhite Steel UNI EN 10111 DD13.*
Upper pad: *Thermoplastic elastomer TPV 80shA, coloured depending on the hardness of the inner elastic body.*

Dimensioni - *Dimension*

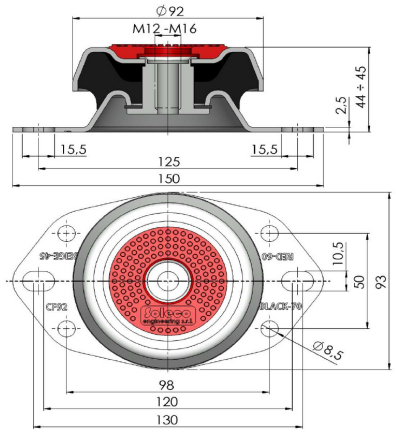

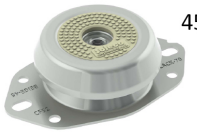

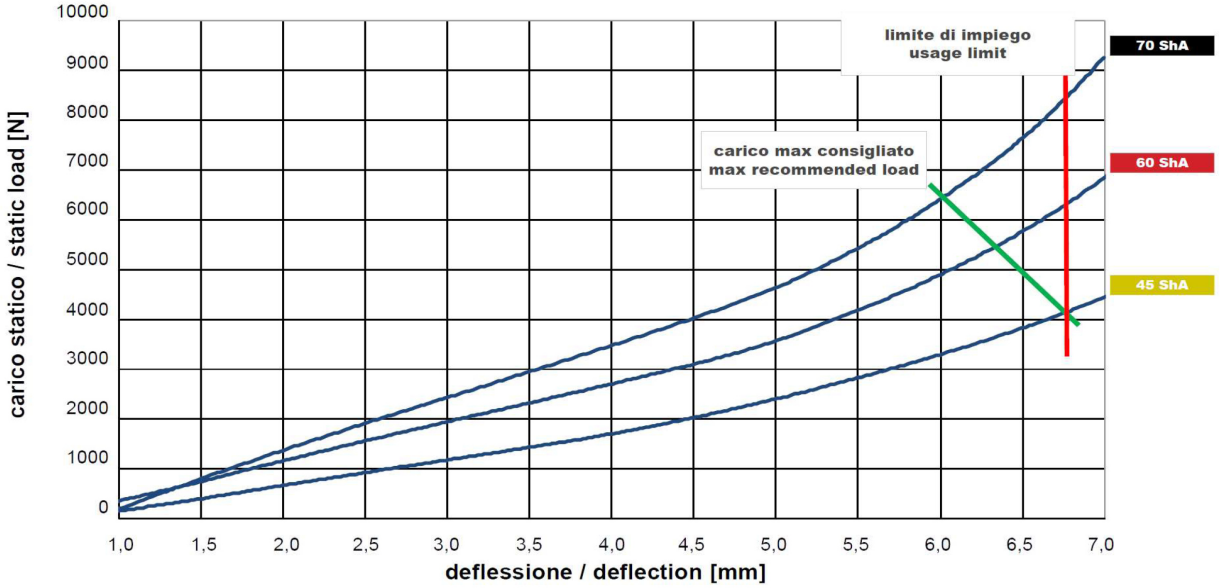

Frequenza naturale / *Natural frequency* : **7 - 14 Hz**	Tolleranza durezza elastomero ± 5 shA / Elastomer hardness tolerance ± 5 shA

Tolleranze di precisione sulle curve di carico / cedimento ± 0,5% - *Accuracy tolerances on load/deflection curves ± 0.5%*

N° REGISTRO PROVE / *TEST REGISTER NUMBER* : 242-243-244/17GM	OPERATORE / *OPERATOR* : Taras Servatyak	Dinamometro / *Dynamometer* matr. MCH009

SCHEDA DI PROVA - TEST DATA SHEET

Soleco engineering s.r.l. Pioltello - Italy	Oggetto: **supporto antivibrante a CAMPANA CFNARNR15050.. 45-60-70-80shA**	*Object : **Bell anti-vibration mount CFNARNR15050.. 45-60-70-80shA***	Form nr. 7015
	Valori indicati dalle curve sono conseguenti a prove statiche ricavati con dinamometro marca Acquati modello AG/10E a temperatura +22÷25°C *The values indicated by the curves are the result of static tests obtained with Acquati AG/10E dynamometer at +22÷25 °C*		Data - *Date* 21/03/2024

Provenienza materiale : *Material origin:*	X	DA MAGAZZINO - *FROM WAREHOUSE*
		DA FORNITORE - *FROM SUPPLIER* ……

Curva ottenuta dopo la prova di n° 3 campioni - *Curve obtained after 3 tests*

Materiali utilizzati / *Adopted material*

Elemento elastico: Gomma Naturale resistente a temperature di esercizio da -20 a +90°C.
Corpo metallico: Acciaio UNI EN 10111 DD13 con superficie zincata UNI ISO 2081 Fe/Zn 15c1A bianca.
Cuscinetto superiore: Elastomero termoplastico TPV 80shA colorato rispondente all'elemento elastico interno:
45shA Beige - 60shA Rosso - 70shA Nero - 80sh Azzurro
A richiesta: Versione in acciao INOX AISI 316

Elastic body: *Natural Rubber resistant to operating temperatures from -20 to +90°C.*
Metallic body: *Zinc UNI ISO 2081 Fe/Zn 15c1Awhite Steel UNI EN 10111 DD13.*
Upper pad: *Thermoplastic elastomer TPV 80shA, coloured depending on the hardness of the inner elastic body:*
45shA Beige - 60shA Red - 70shA Black - 80sh Blue
On request: *AISI 316 stainless steel version*

Dimensioni - *Dimension*

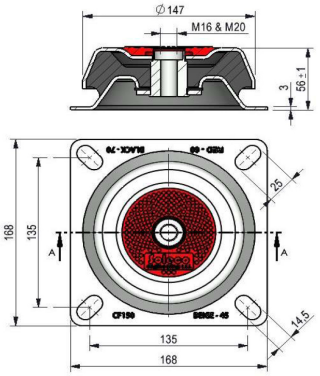

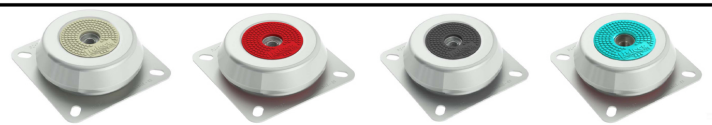

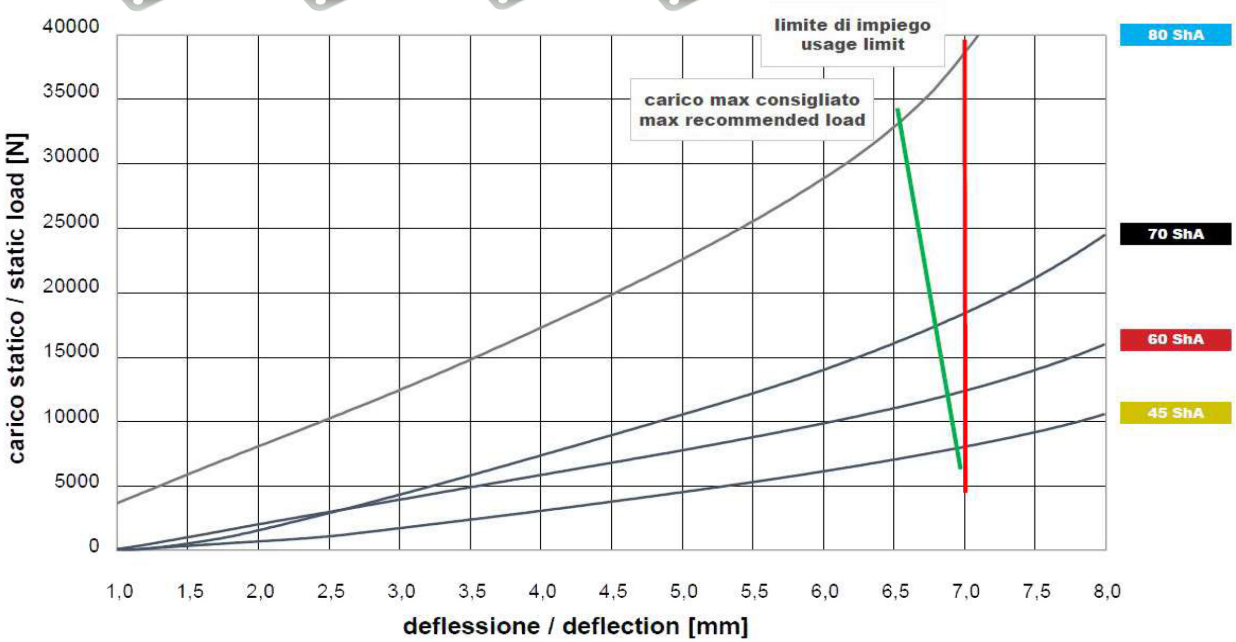

Frequenza naturale / Natural frequency : **6 - 12 Hz**	Tolleranza durezza gomma ± 5 shA / *Rubber hardness tolerance ± 5 shA*

Tolleranza lettura cella di carico da 100 kN ± 0,5% - 100 kN load cell accuracy ± 0.5%

N° REGISTRO PROVE / *TEST REGISTER NUMBER*: 180,181,182-GM17+81A-GM20	OPERATORE / *OPERATOR* : Ahmed Gawish	Dinamometro / *Dynamometer* matr. MCH009

Series	
Rubber shock absorbers	
Review **1**	Language **ENGLISH**
Catalogue **KT**	

Via G. Agnelli, 7 - 33053
LATISANA (UD) - ITALY
Tel. +39 0432 823011 -
Fax +39 0432 773855 -
www.ktk.it - info@ktk.it

The data indicated in this manual is purely indicative. The manufacturer reserves the right to modify the data whenever it is considered necessary.